City of Coon Rapids
11155 Robinson Drive
Coon Rapids, MN 55433-3761
Tel: 763-755-2880
Fax: 763-767-6491
www.coonrapidsmn.gov

COON RAPIDS Minnesota

MnDOT PEDESTRIAN CURB RAMP DETAIL

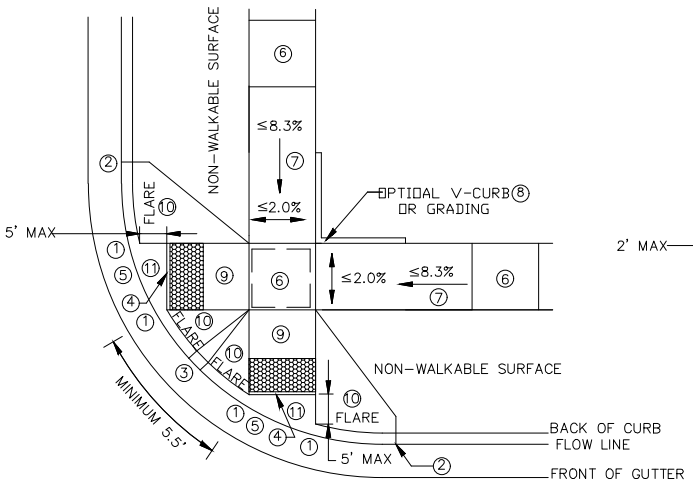

ADJACENT TO NON-WALKABLE SURFACE

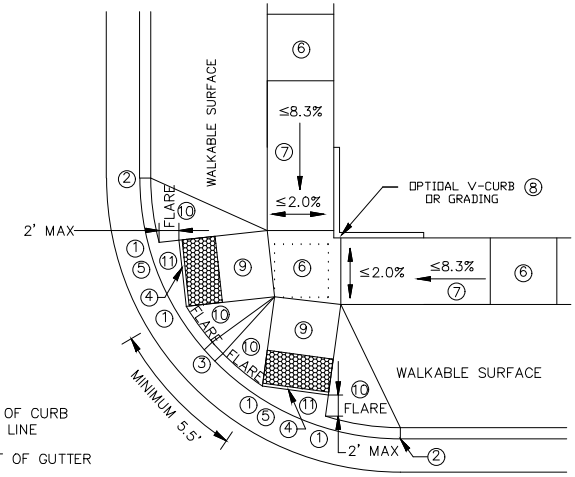

ADJACENT TO WALKABLE SURFACE

COMBINED DIRECTIONAL

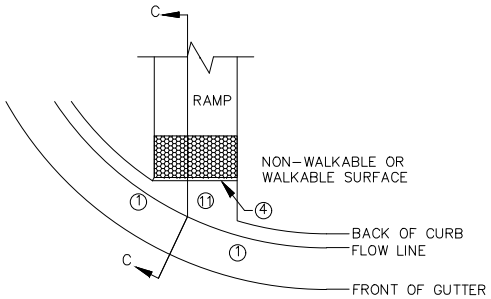

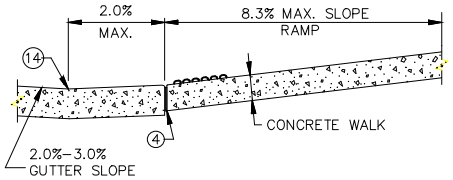

SECTION C-C

CURB FOR DIRECTIONAL RAMPS ⑫

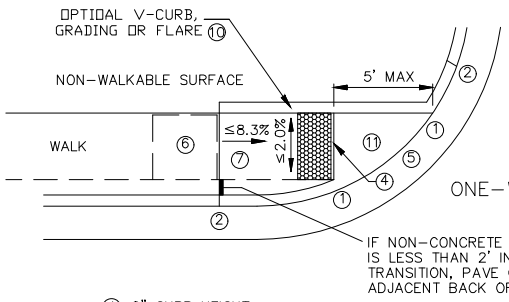

ONE-WAY DIRECTIONAL

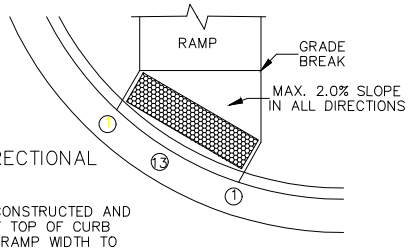

1. 0" CURB HEIGHT.
2. FULL CURB HEIGHT.
3. 3" MINIMUM CURB HEIGHT.
4. 1/2" PREFORMED JOINT FILLER MATERIAL AASHTO M 213. JOINT FILLER SHALL BE PLACED FLUSH WITH THE BACK OF CURB AND ADJACENT SIDEWALK. JOINT SHALL BE FREE OF DEBRIS. RECTANGULAR DETECTABLE WARNINGS SHALL BE SET BACK 3" FROM THE BACK OF CURB. RADIAL DETECTABLE WARNINGS SHALL BE SET BACK 3"-6" FROM THE BACK OF CURB.
5. SEE PEDESTRIAN ACCESS ROUTE CURB AND GUTTER DETAIL FOR INFORMATION ON CONSTRUCTING CURB AND GUTTER AT CURB OPENINGS. SEE SHEET NO. 3 OF 5.
6. 4' BY 4' MIN. LANDING WITH MAX. 2% SLOPE IN ALL DIRECTIONS.
7. IF RAMP SLOPE IS LESS THAN 5% NO SECONDARY LANDING IS REQUIRED.
8. V CURB, IF USED, SHALL BE PLACED OUTSIDE THE SIDEWALK LIMITS WHEN RIGHT OF WAY ALLOWS.
9. RUNNING SLOPE LESS THAN OR EQUAL TO 8.3% & CROSS SLOPE LESS THAN OR EQUAL TO 2%.
10. SEE SHEET 4 OF 5, TYPICAL SIDE TREATMENT OPTIONS, FOR DETAILS ON FLARES AND RETURNED CURBS.
11. MAX. 2% SLOPE IN ALL DIRECTIONS IN FRONT OF GRADE BREAK AND DRAIN TO FLOW LINE. SHALL BE CONSTRUCTED INTEGRAL WITH CURB AND GUTTER.
12. TO BE USED FOR ALL DIRECTIONAL RAMPS.
13. DOMES PLACED AT THE BACK OF CURB WHEN ALLOWABLE SETBACK CRITERIA IS EXCEEDED.
14. ANY VERTICAL LIP THAT OCCURS AT THE FLOW LINE MAY NOT BE GREATER THAN 1/4 INCH.

NOTES:

SEE STANDARD PLATE 7038 AND SHEET 4 OF 5 FOR DETAILS ON DETECTABLE WARNING.

SLOPES ARE DEFINED AS ABSOLUTE ELEVATION DIFFERENCE PER LENGTH OF RUN. (AS OPPOSED TO A RELATIVE SLOPE WITH RESPECT TO A CURB LINE OR CURB HEIGHT.)

LANDINGS SHALL BE LOCATED ANYWHERE THE PEDESTRIAN ACCESS ROUTE CHANGES DIRECTION, AND AT THE TOP OF RAMPS THAT HAVE RUNNING SLOPES GREATER THAN 5%.

INITIAL CURB RAMP LANDINGS SHALL BE CONSTRUCTED WITHIN 15' FROM THE BACK OF CURB, WITH 6' FROM THE BACK OF CURB BEING THE PREFERRED DISTANCE.

SECONDARY CURB RAMP LANDINGS ARE REQUIRED FOR EVERY 30" OF VERTICAL RISE WHEN THE LONGITUDINAL SLOPE IS 5% OR GREATER.

CONTRACTION JOINTS SHALL BE CONSTRUCTED AT ALL GRADE BREAKS.

TOP OF CURB SHALL MATCH PROPOSED ADJACENT WALK GRADE.

USE 6" CONCRETE WALK FOR ALL INITIAL RAMP AND LANDING AREAS.

CONTRACTOR SHALL EMPLOY APPROPRIATE METHODS FOR INTERMEDIATE GRADE CONTROL TO ENSURE ALL GRADE BREAKS ARE CONSTRUCTED PROPERLY.

ALL GRADE BREAKS SHALL BE PERPENDICULAR TO THE DIRECTION OF TRAVEL/PEDESTRIAN ACCESS ROUTE.

4' MINIMUM WIDTH OF DETECTABLE WARNING IS REQUIRED FOR ALL RAMPS. SHARED USE PATHS SHALL HAVE DETECTABLE WARNING ACROSS THE ENTIRE WIDTH OF PATH WHEN THE PATH CROSSES A ROAD.

MnDOT STANDARD PLAN SHEET NO. 5-297.250 (2 OF 5)
STANDARD APPROVED: MAY 10, 2012

DRAWN: A.S.W.	DATE: 12/12/2014	SCALE:	PLATE NO. STR-19