PLAN VIEW

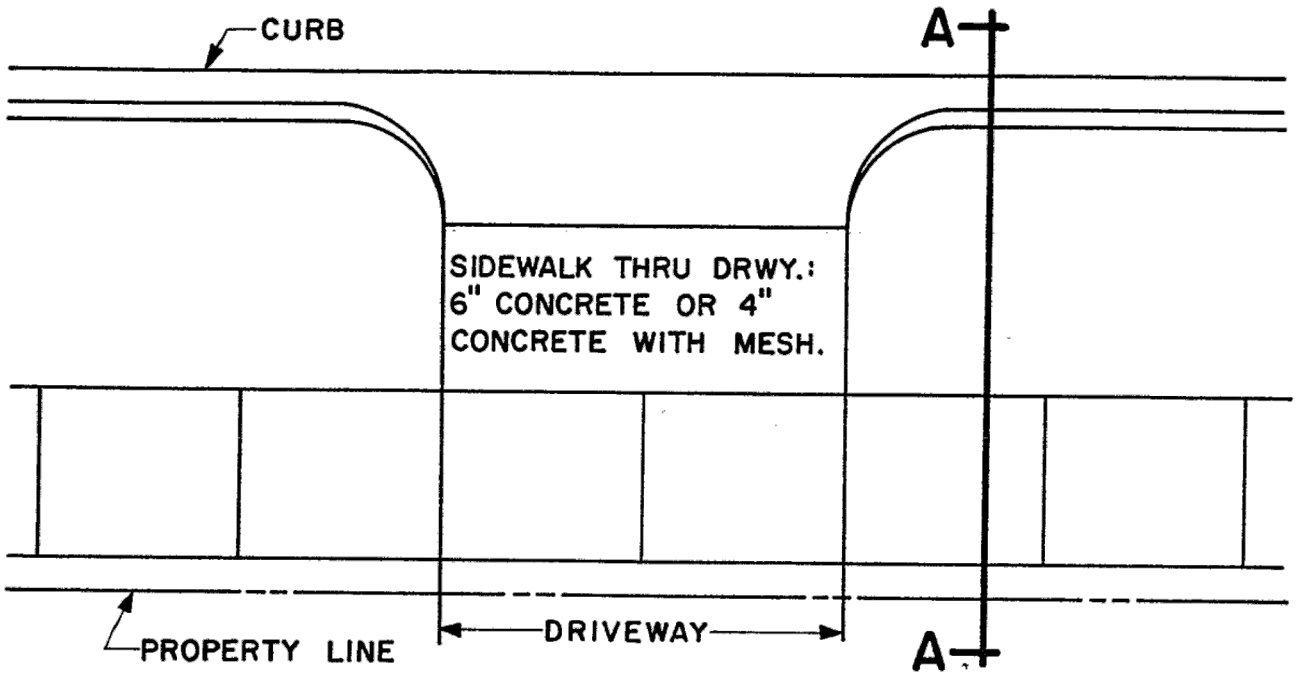

SECTION A-A

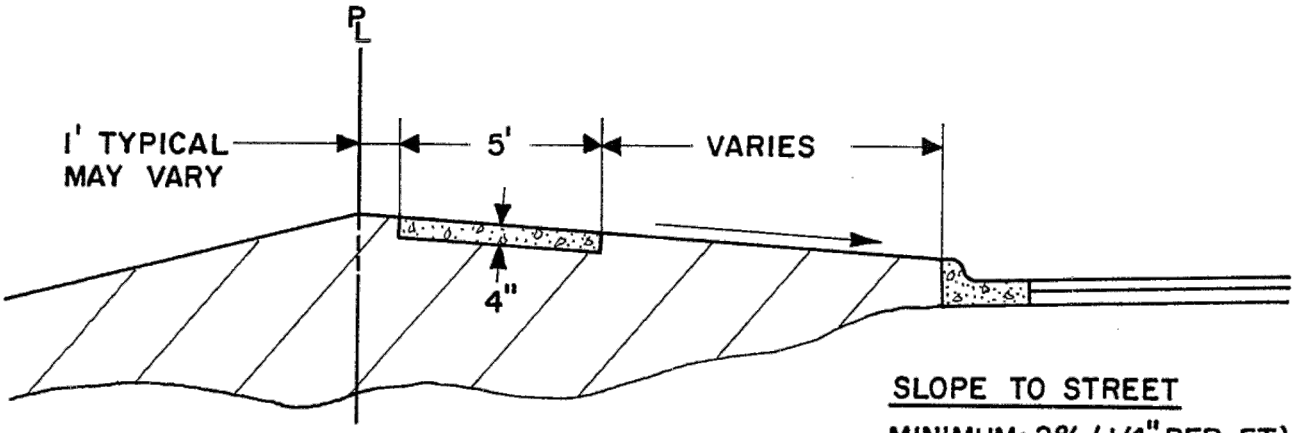

SLOPE TO STREET

MINIMUM: 2% (1/4" PER FT.)
MAXIMUM: 10%

City of Coon Rapids
11155 Robinson Drive
Coon Rapids, MN 55433-3761
Tel: 763-755-2880
Fax: 763-767-6491
www.coonrapidsmn.gov

COON RAPIDS Minnesota

CONCRETE SIDEWALK SECTION

DRAWN: A.S.W.	DATE: 12/15/2014	SCALE:	PLATE NO. STR-6