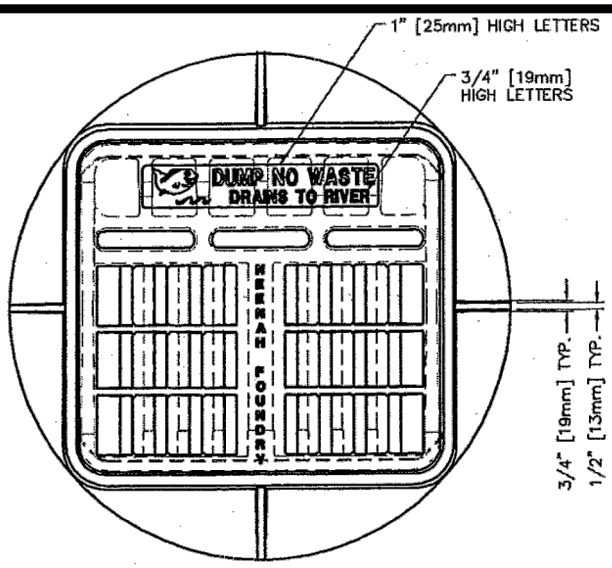

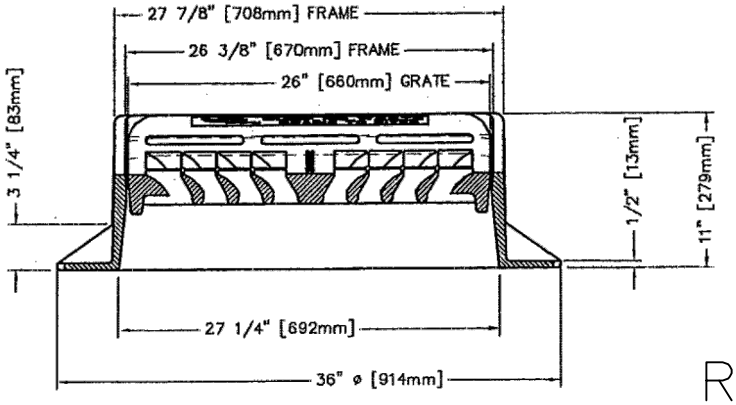

R-3501-L2

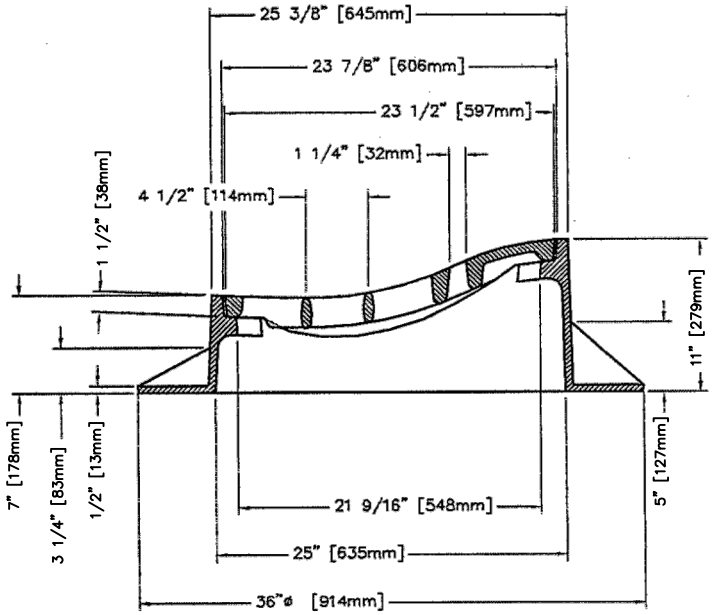

City of Coon Rapids
11155 Robinson Drive
Coon Rapids, MN 55433-3761
Tel: 763-755-2880
Fax: 763-767-6491
www.coonrapidsmn.gov

COON RAPIDS Minnesota

ROLL FRAME AND "L2" GRATE

DRAWN: A.S.W.	DATE: 2/6/2014	SCALE:	PLATE NO. STM-10